BERNARD GRUPPE

Operating Instructions

BMA TLC

BERNARD Mobility Analyser Traffic Light Controller

11/2026



The **BMA TLC** enables **Adaptive Traffic Control** through **continuous detection** of **moving traffic** and **communication** to the **traffic light controller**.

Table of Contents

BMA TLC - Operating Instructions 4

1. Product overview 5

Product identification 5

Short description 5

Target group and qualification 5

Operator responsibility 5

Intended use 5

Improper use 5

2. Safety 6

Signal words and symbols 6

General safety 6

Electrical safety 6

Mechanical safety 6

IP protection and environmental conditions 6

3. Technical data 8

Dimension drawing 11

Distances to objects 11

Cable cross-section and maximum cable length 13

4. Scope of delivery 14

5. Mounting and installation 15

Insert / replace SIM card (optional) 15

Mechanical mounting 17

Electrical connection 22

6. Commissioning 25

6.1 Status LEDs 25

7. Operation / use 28

7.1 Operation via Control Center 28

7.2 Service Interface 28

8. Troubleshooting 36

9. Transport and storage 37

10. Maintenance and service 38

11. Decommissioning and disassembly 39

12. Conformity and disposal (EU) 40

Data protection 40

Conformity 40

Disposal 40

13. Contact 41

BMA TLC - Operating Instructions

1. Product overview

Product identification

- **Product name:** BERNARD Mobility Analyser Traffic Light Controller (BMA TLC)
- **Models:**
  - BMA-TLC-V3-27 (2.7 mm focal length)
  - BMA-TLC-V3-60 (6.0 mm focal length)
- **Hardware revision:** v3

Short description

The **BMA TLC** captures image data using an integrated camera and evaluates it directly on the device. Objects are detected and classified within the image area. Event triggers generate events that are transmitted to the **traffic light controller** via the **BMC** using potential-free contacts. Central management is handled via the Control Center.

Target group and qualification

Installation and commissioning may only be carried out by trained specialist personnel.
Operation is only permitted for instructed users.

Operator responsibility

The operator is responsible for integrating the BMA TLC into a higher-level system and for evaluating and using the provided detection data and events.

Intended use

The **BMA TLC** is intended for continuous traffic detection in adaptive traffic control applications.

- traffic-dependent detection for traffic light systems
- triggering event outputs via the BMC
- detecting vehicles and other road users within the detection area

Improper use

The **BMA TLC** is not intended for:

- safety-critical functions where incorrect or missing detection could lead to injury or property damage
- legally binding evidence collection or surveillance in the context of public-authority tasks
- operation outside the specified operating conditions or with an obstructed / unsuitable field of view

2. Safety

Signal words and symbols

DANGER

Hazardous situation which, if not avoided, will result in death or serious injury.

WARNING

Hazardous situation which, if not avoided, could result in death or serious injury.

CAUTION

Hazardous situation which, if not avoided, could result in minor or moderate injury.

NOTICE

Possible property damage or important additional information.

General safety

- Installation only by qualified personnel.
- Secure ladders or lifting platforms when working at height.
- Secure the work area against falling parts during installation.

Electrical safety

- Disconnect the power supply before installation and wiring; work on electrical connections must only be performed in a de-energized state.
- Only establish the power supply in accordance with the product specification.
- Check cables and connectors for damage before commissioning.
- Take the BMA out of operation and contact support if cables or connectors are damaged.

Mechanical safety

- Only install on suitable, load-bearing poles / substructures.
- Ensure that detector and mounting bracket are firmly attached.
- Tighten all fastening elements properly.
- Perform a visual inspection after installation (secure fit, no loose parts).

IP protection and environmental conditions

- To maintain the IP protection rating, point cable connections downward and fully lock all plug connections.

- Route cables properly and ensure strain relief.
- Operate the detector only within the specified operating conditions (see Technical data).
- Do not open the device (no serviceable parts inside; opening voids the warranty).

3. Technical data

General	
Function	**Continuous** detection of **moving traffic** and **communication** to the **traffic light controller** (via BMC).
Typical applications	Adaptive Traffic Control
Captured object classes (model Traffic & Parking Accuracy+)	**12+1** (see Traffic & Parking object classes)
Detection accuracy* (model Traffic & Parking Accuracy+) **) With optimal alignment and calibration*	• Counting accuracy: **>95%** • Classification ◦ Main classes **>95%** ◦ Subclasses **>90%**
Day / Night	**Yes** / **Yes** (with IR illumination)
Lanes	Up to **4**
Virtual loops	Up to **12** via BMC
Fault output	Optional
Frame rate	**30 FPS**
Expected system latency	**100–130 ms** From the road user physically entering the zone until the contact switches at the BMC.
Mounting parameters	
Mounting type	Pole mounting, clamping range diameter 60-150 mm
Mounting height	**3.5 to 12 m** *Note:* A greater mounting height can help reduce occlusion of objects by large vehicles.

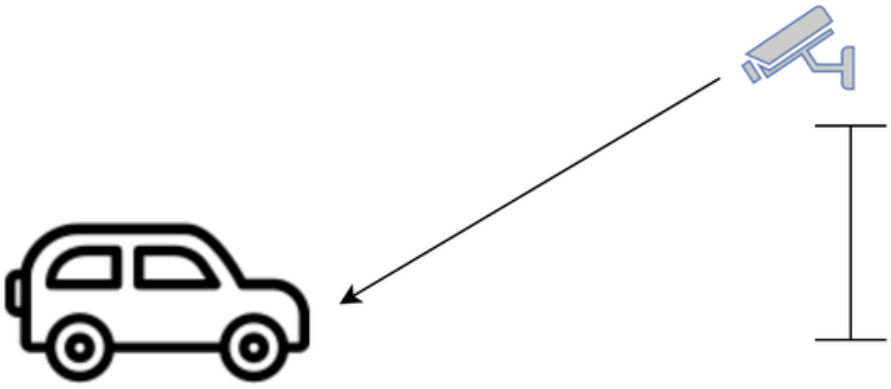

General	
Horizontal mounting angle	**0°-360°** *Note:* A mounting angle of approximately 15° generally provides better classification results because more object details become visible from the side, e.g. wheels and axles.

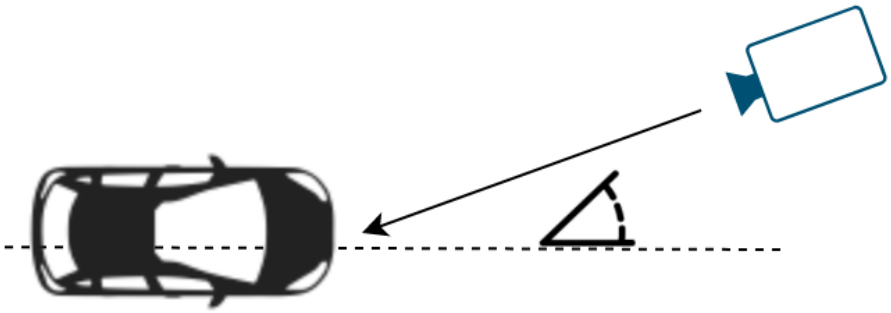

Electrical characteristics	
Power supply	Power is supplied via the BMC (**24–30 V DC** at the BMC input, depending on cable length and cross-section; see Cable cross-section and maximum cable length)
Maximum power consumption	**20 W**
Average power consumption	• Operation, IR off: **7 W** • Operation, IR on: **10 W**
Connectivity	
Technology	LTE Cat-4
4G bands	Global: B1, B2, B3, B4, B5, B7, B8, B8_US, B9, B12, B13, B14, B18, B19, B20, B25, B26, B28
SIM format	Nano-SIM, SIM card included
Transmission protocol/ format	MQTT / JSON (Event schema)
Environmental conditions	
Operating conditions	−34 °C to +74 °C
Protection class	IP65
Dimensions and weight	
Device dimensions without bracket	17.8 cm x 11.9 cm x 10.9 cm (L x W x H)

General	
Packaging dimensions	32.5 cm x 23.5 cm x 23 cm (L x W x H)
Device weight with bracket	880 g
Gross weight	2.3 kg

Dimension drawing

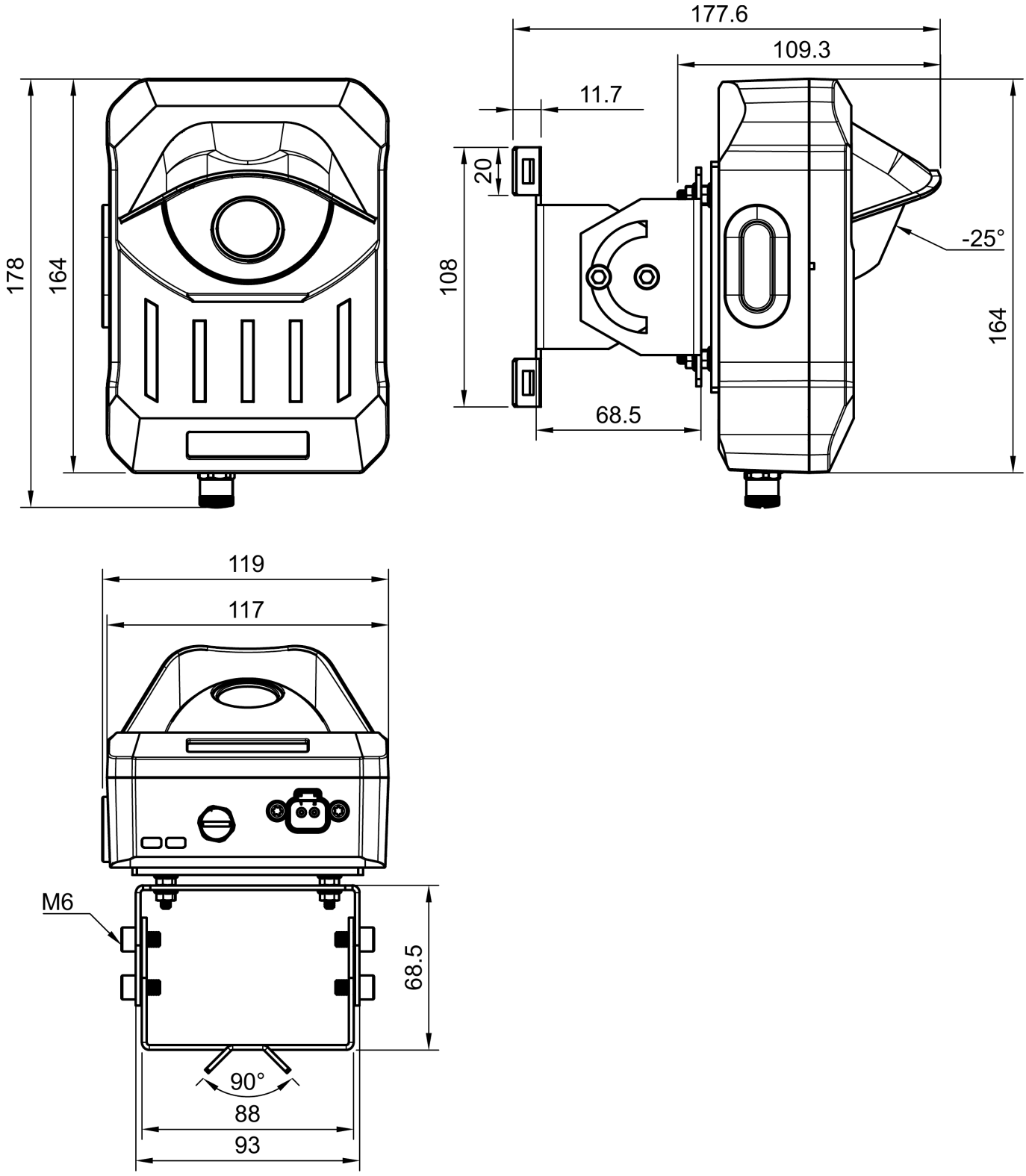

Distances to objects

The following distance ranges show at which distances objects can be detected depending on focal length and alignment.

BMA-TLC-V3-27

Focal length (mm)	Field of view H/V (°)	Orientation	Person/Bicycle (m)	Car/Van (m)	Truck/Bus (m)
2.7	93 / 61	Near range	0 — 15	0 — 15	0 — 15*
2.7	93 / 61	Far range	7 — 20	7 — 40	7 — 60

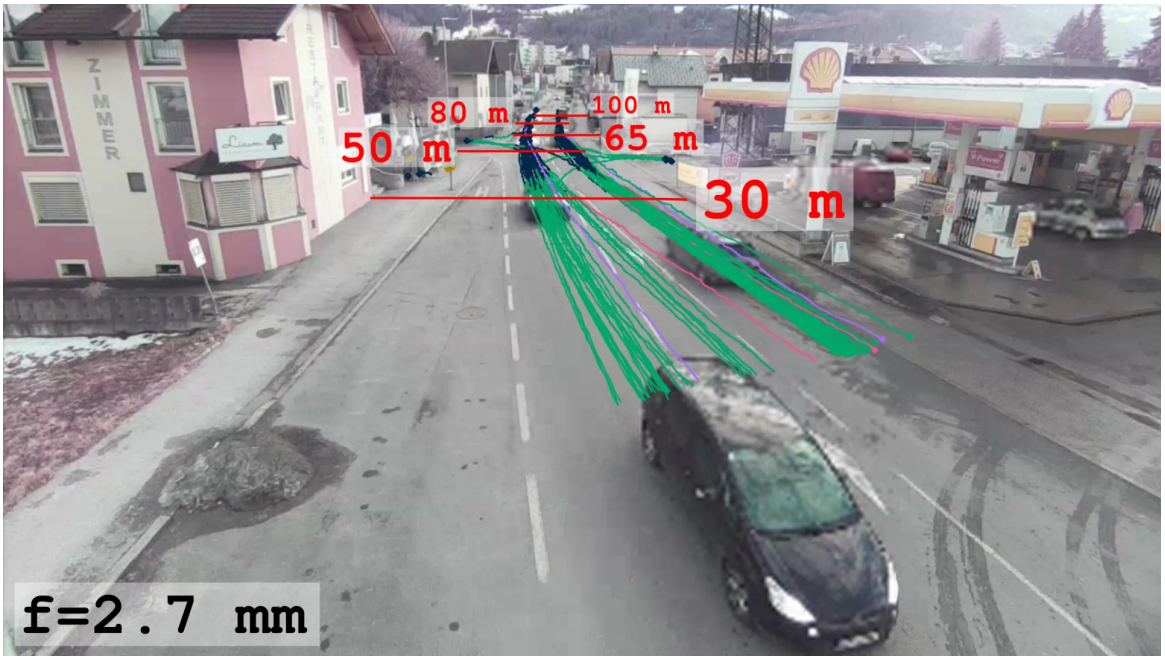

Example view for 2.7 mm focal length (range and field-of-view example).

BMA-TLC-V3-60

Focal length (mm)	Field of view H/V (°)	Orientation	Person/Bicycle (m)	Car/Van (m)	Truck/Bus (m)
6.0	55 / 30	Near range	5 — 20	5 — 20	5 — 20*
6.0	55 / 30	Far range	10 — 40	10 — 60	10 — 90

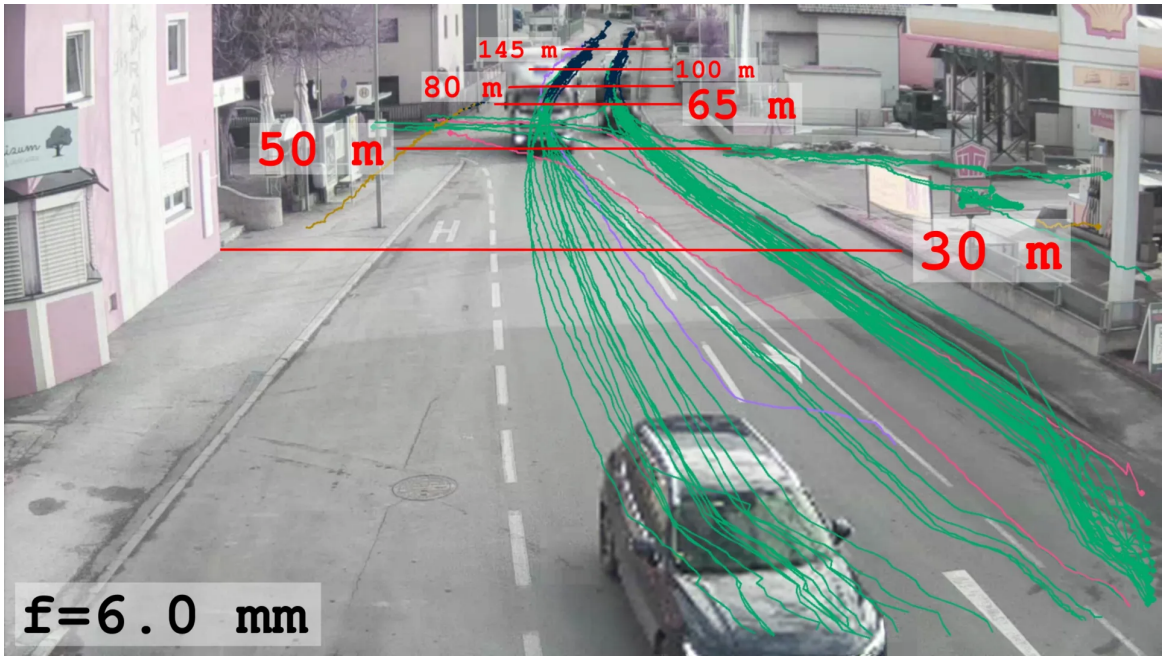

Example view for 6.0 mm focal length (range and field-of-view example).

Legend:

- `*`: Long trucks / buses may not be fully within the field of view.
- `Near range`: BMA mounted with a downward tilt.
- `Far range`: BMA mounted with an almost horizontal alignment.

> **NOTE**
>
> Installation height **6 m**, clear line of sight, sufficient lighting available.

Cable cross-section and maximum cable length

Maximum cable length between BMA TLC and BMC depending on the supply voltage at the BMC input and cable cross-section. A 24 V supply is supported within the limits below; 30 V is recommended for longer cable runs:

Cable cross-section	Maximum length at 24 V	Maximum length at 30 V
1.5 mm²	150 m	300 m
0.75 mm²	75 m	150 m
0.5 mm²	50 m	100 m

4. Scope of delivery

☐ 1 x BMA TLC
☐ 1 x mounting bracket
☐ 2 x hose clamps (inner diameter 60-150 mm; width 9 mm)
☐ 1 x 15 m power cable (0.75 mm²)
☐ 1 x Nano-SIM (inserted)
☐ 1 x quick-start installation guide

Not included: installation tools or other accessories such as power supply or Ethernet cable. The BMC is not included in the scope of delivery.

5. Mounting and installation

Insert / replace SIM card (optional)

The device is supplied with a SIM card by default. In this case, this section can be skipped.

> **OWN SIM CARD**
>
> If you use your own SIM card instead of the supplied one, disable the SIM PIN beforehand (e.g. in a smartphone). The device cannot use a SIM card with an active PIN. Enable roaming if the device will be used outside your domestic network.

> **ELECTRICAL SAFETY**
>
> Do not replace the SIM card during operation. The device must be de-energized before opening the service flap.

> **RECOMMENDATION**
>
> Replace the SIM card before installation in a clean, dry environment at room temperature, not in the field.

Required: tweezers, nano-SIM

1. Open the service flap by carefully pulling out the rubber plug.



Service flap open; rubber plug removed

2. If present, remove the SIM card. Unlock it by pressing it in and remove it with tweezers.

> **NOTE**
>
> Make sure the SIM card does not fall into the housing. The housing must not be opened.

3. Insert the new SIM card using tweezers.



Remove and insert the SIM card

4. Close the rubber plug carefully and ensure that it seals completely.

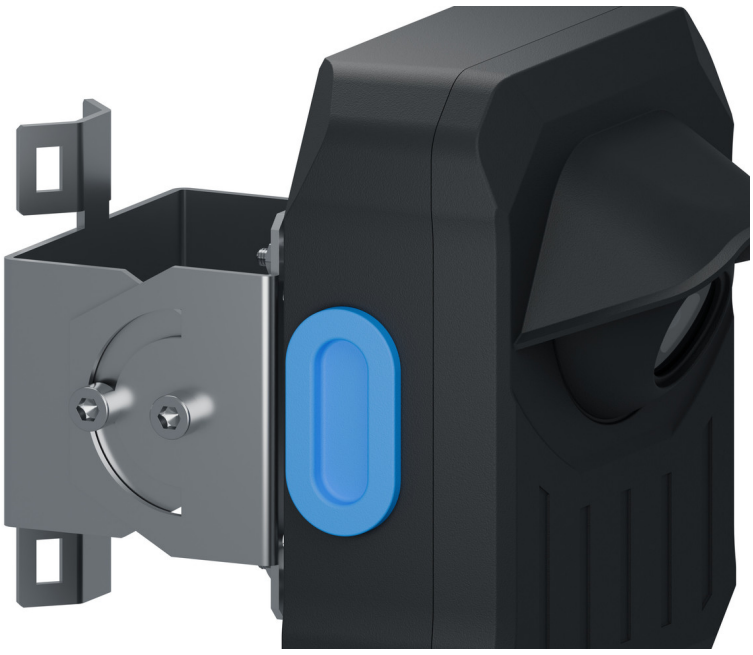

Rubber plug fully seated

> **NOTE**
>
> An incorrectly inserted rubber plug can cause leakage and damage the device.

5. If necessary, the APN must be configured in the mobile network configuration of the Service Interface.

Mechanical mounting

Tools required for installation:

Tool	Figure
5 mm hex key	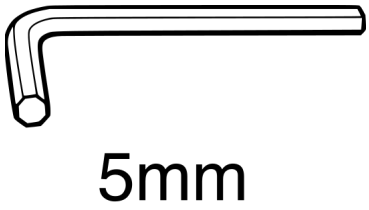
7 mm spanner	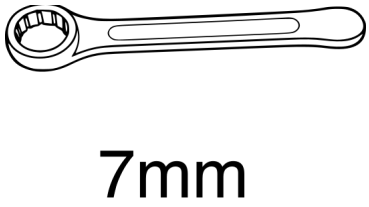
PH2 Phillips screwdriver	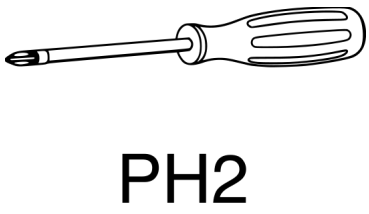

> **WORKING AT HEIGHT**
>
> Secure ladders or lifting platforms and secure the work area against falling parts.

Vertical pole

1. Mount the BMA on the pole.
    - Feed 2× hose clamps through the two openings in the bracket and fasten them to the pole (PH2 Phillips screwdriver). Horizontal alignment is done by rotating the device on the pole.

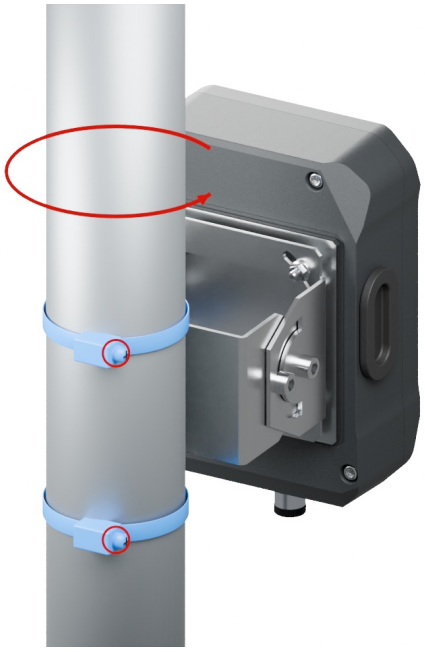

Mounting on a vertical pole. Horizontal alignment.

2. Align the BMA.
   - Slightly loosen the 4× socket head screws (5 mm hex key).
   - Align the device vertically. Then tighten all screws.



Vertical alignment

Animations for these two steps: watch online.

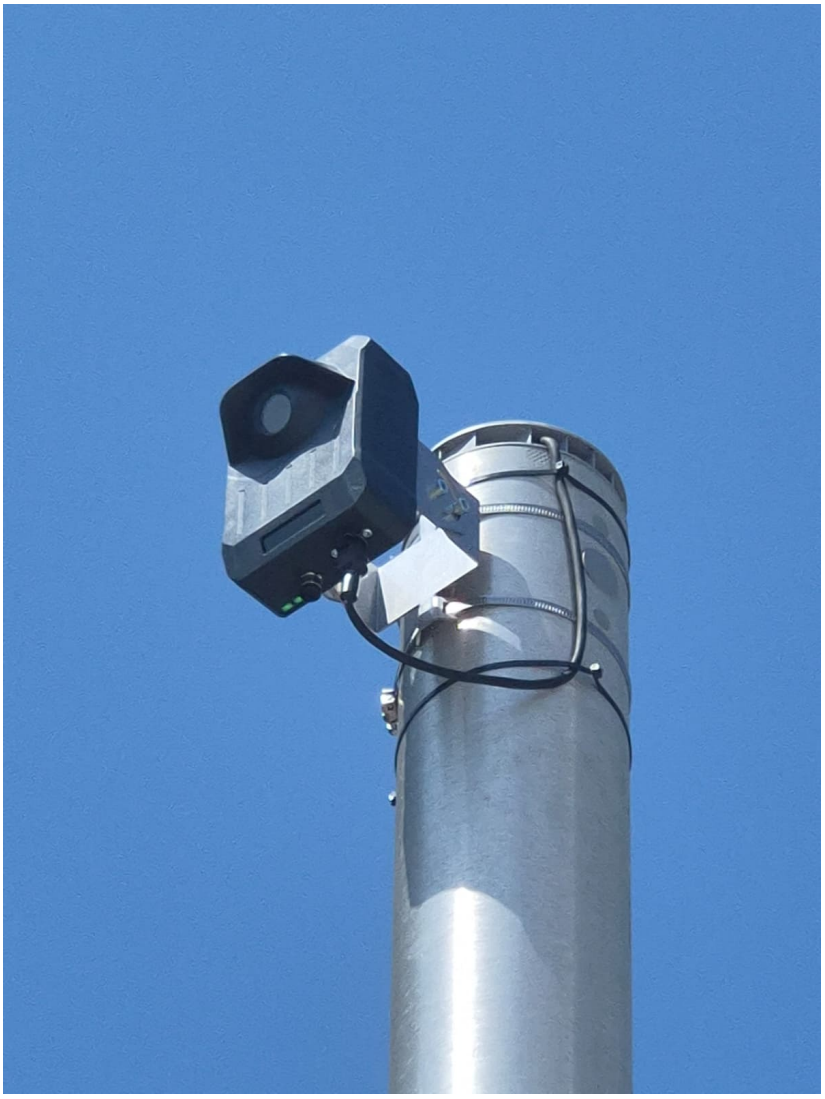

BMA TLC V3 mounted on a pole with externally routed cable

Horizontal pole

Animations for these four steps: watch online.

1. Release the mounting bracket.
    - Loosen the 4× hex nuts on the back (7 mm spanner).

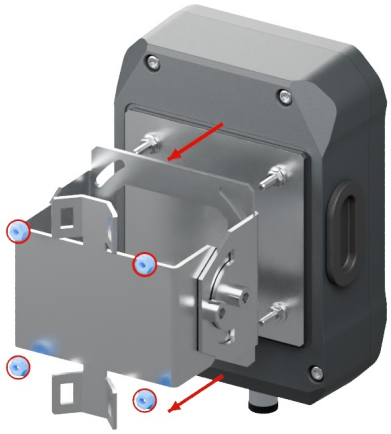

Release the bracket for horizontal pole mounting

2. Rotate the bracket by 90° and reattach it.
    - Reattach the bracket with the 4× hex nuts (7 mm spanner).

> **TORQUE**
>
> Observe a maximum tightening torque of **1.3 Nm**.

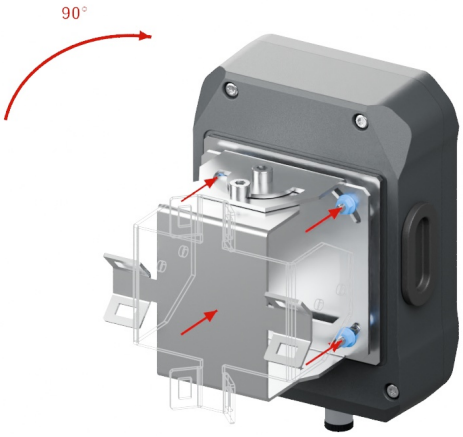

Bracket rotated and reattached

3. Mount the BMA on the pole and align it vertically.
    - Feed 2× hose clamps through the two openings in the bracket and fasten them to the pole (PH2 Phillips screwdriver).
    - Align the BMA vertically by rotating it on the pole.

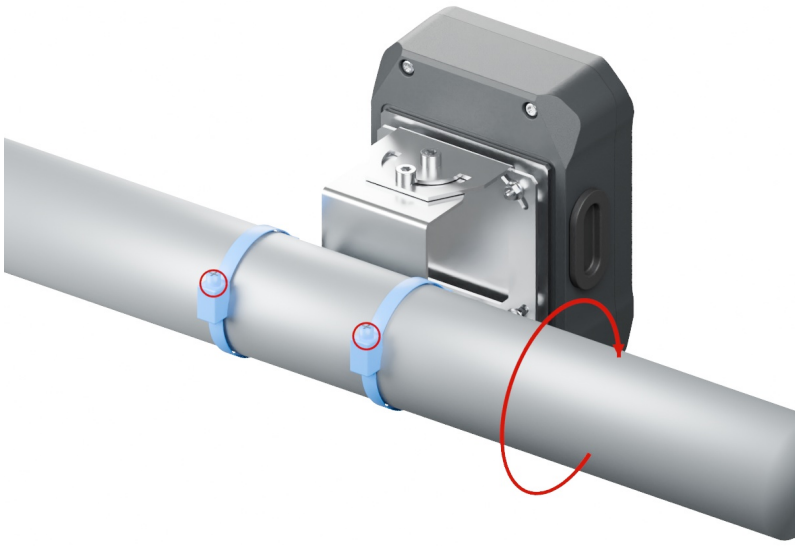

Mounting on a horizontal pole. Vertical alignment.

4. Align the BMA horizontally.
    - Slightly loosen the 4× socket head screws (5 mm hex key).
    - Align the BMA horizontally. Then tighten all 4 screws.

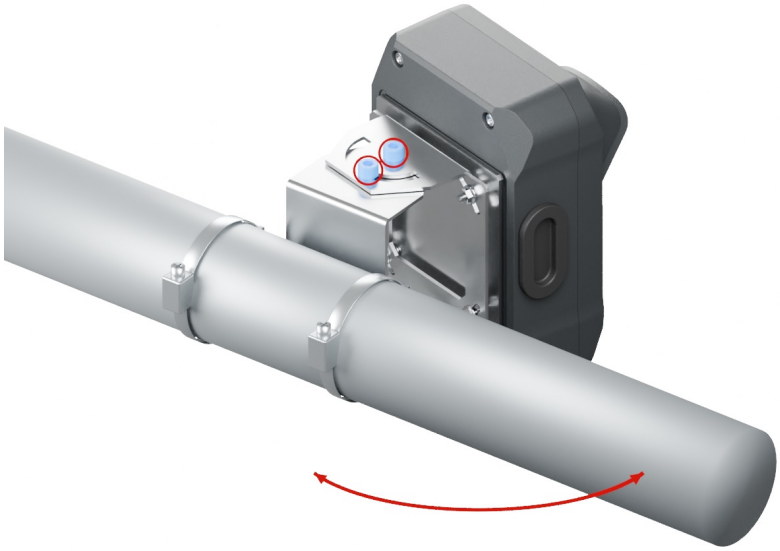

Horizontal alignment



BMA TLC V3 mounted on a horizontal pole

VISUAL INSPECTION

Perform a visual inspection after installation (secure fit, no loose parts).

ALIGNMENT / IP PROTECTION

Point the device upward, cable connections downward.

Electrical connection

ELECTRICAL SAFETY

Disconnect the power supply before installation and wiring; work on electrical connections must only be performed in a de-energized state. Supply power to the BMA only via the sensor outputs of the BMC in accordance with the product specification. Check cables / connectors for damage before commissioning.

1. Connect the supplied cable directly or via an extension to the sensor output of the BMC. The polarity of the connections is not relevant. Observe the maximum cable lengths according to Cable cross-section and maximum cable length.

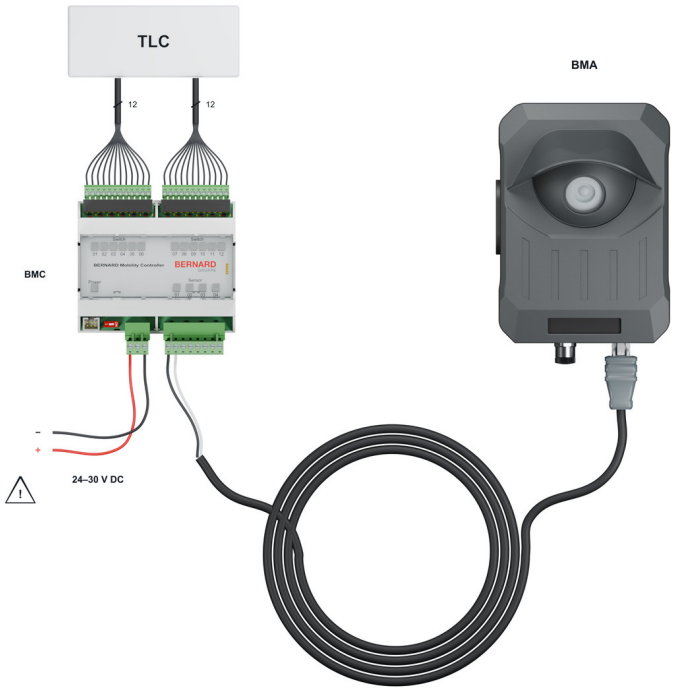

Connecting the BMA to the sensor output of the BMC

2. Connect the power plug to the device until an audible click is heard.



Power connector on the detector (insert until an audible click is heard)

NOTE

Connect the mounting bracket to the local grounding point using the shortest possible cable to optimize interference immunity.

6. Commissioning

1. Energize the power supply.
    - For LED behavior, see Status LEDs.
    - If the actual behavior differs, see Troubleshooting.
2. Setup
    - Retrieve the camera image of the device in the Control Center and fine-tune the mounting alignment if necessary.
    - See solution description: Adaptive Traffic Control.

6.1 Status LEDs



Detector underside: 1 = status / power (left), 2 = connectivity (right).

Left LED (1): status / power · **Right LED (2):** connectivity to the Control Center.

> **NORMAL OPERATION**
>
> **Both LEDs steady green: normal operation.** The application is running and the Control Center is reachable.

Startup sequence

1. **Power on.** Left steady red; right off.

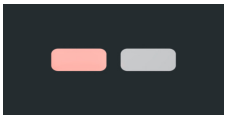

2. **Color sequence.** Red, green, blue and off: first the right LED, then the left.

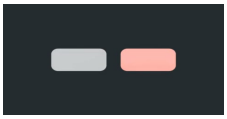

Play animation

3. **Initialization.** The left LED may flash red; the right LED flashes blue.



Play animation

4. **Ready.** Left green: application running, typically under 2 minutes. Right green: Control Center reachable, typically 3-8 minutes.



The LEDs may turn green at different times. Connectivity may take longer depending on network conditions. The animations show each phase separately; waiting phases are shortened.

The LEDs indicate independent states. In the tables below, the other LED is shown steady green as an example.

Left LED · Status / power

Indicator	Pattern	Meaning
 Play animation	Steady green	**Running.** The application is running.
 Play animation	Brief green flash every 5 seconds	**Standby.** The application is inactive and is not processing images.
 Play animation	Red, flashing once per second	**Not ready or reporting an error.** This can occur during startup. If it persists, see Troubleshooting.

Right LED · Connectivity

Indicator	Pattern	Meaning
 Play animation	Steady green	**Control Center reachable.** With both LEDs steady green, the device is in normal operation.
 Play animation	Blue, flashing once per second	**Control Center reachability not confirmed.** Internet access may still be available. This can occur during startup; if it persists, see Troubleshooting.

7. Operation / use

7.1 Operation via Control Center

During normal operation, the BMA is managed centrally via the Control Center.

1. Perform device configuration: model selection, event triggers, and rule definition. See: Device configuration in the Control Center.
2. Monitor device status and connectivity and create alerts: Monitoring & Status, Monitoring Alerts
3. Apply updates regularly: Device update

7.2 Service Interface

The Service Interface is intended for local commissioning and on-site diagnostics.

Requirements

1. Notebook with Windows 11, macOS, or Linux; Google Chrome is used as the browser (mDNS must be supported).
2. Ethernet cable with M12 plug (D-coded, 4-pin) and RJ45 plug.

Access steps

1. Connect the M12 plug to the BMA (remove the protective cap from the M12 socket on the BMA first).
2. Insert the RJ45 plug into the notebook.
3. Under Linux, you may need to select the IPv4 method “Link-Local only” for the network interface.
4. Open the browser and call `http://bma.local` (direct notebook ↔ BMA connection).
   - If mDNS is not available for the direct connection, use `http://169.254.42.1` as fallback.
   - If the BMA is integrated into the network via DHCP, access is via `http://<serial-number>.local`, e.g. `http://G-A2603-0001.local`.
5. After disconnecting the cable, reattach the protective cap to the M12 socket on the BMA.

CHANGE PASSWORD (MANDATORY)

Standard login for the Service Interface: username `admin`, password = first segment of the device ID (shown in the Control Center up to the first `-`).

Example: device ID `39b7b668-c7fd-4e91-9d65-b3ab96ebe3f2` → initial password `39b7b668`.

The initial password is device-specific and should be changed on first login. Password policy: see Account in the Service Interface.

NOTE

The Service Interface is intended for on-site service. In normal operation, management is performed via the Control Center.

Functions in the Service Interface

The Service Interface supports service technicians during commissioning, on-site checks, and troubleshooting.

Overview

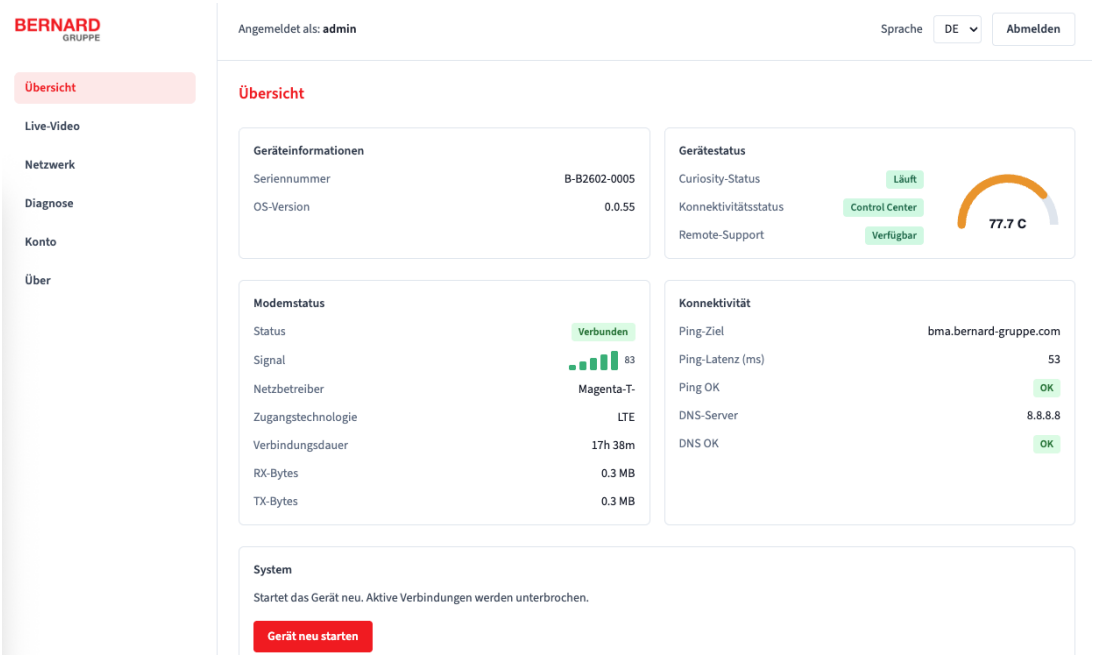

Overview with device, status, and modem information.

- View device information (e.g. serial number, OS version).
- Device status:
  - Application status (Curiosity): status of video processing.
    - Error: application error (see 8. Troubleshooting).
    - Standby: the application is currently inactive.
    - Running: application active, processing and rule evaluation operate normally.
  - Connectivity status:
    - None: no active connection (see 8. Troubleshooting).
    - Internet: Internet connection available.
    - Control Center: connection to the Control Center active.
  - Remote support:
    - Available: remote support is possible.
    - Not available: remote support is currently not possible.
- Modem status:
  - signal strength
  - network operator
  - access technology
  - connection duration
  - transferred data (RX = received, TX = transmitted)

- Perform a controlled restart of the device if required.

Live video

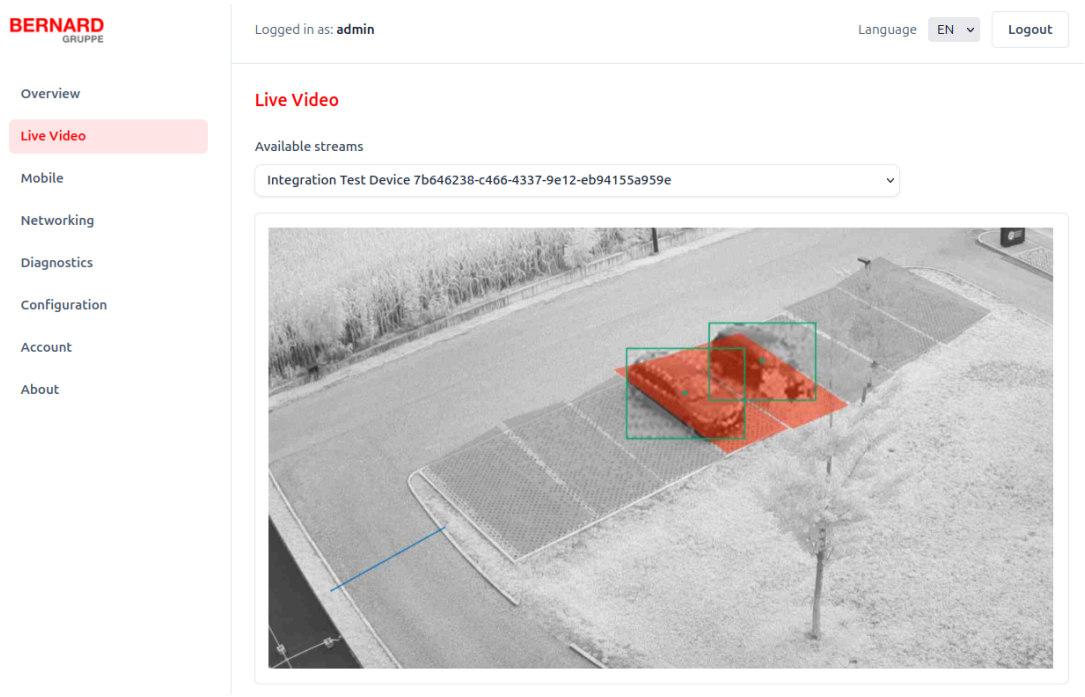

Live video for visibility and alignment checks.

- Select available streams and use the camera image for visual inspection and alignment.

Configuration

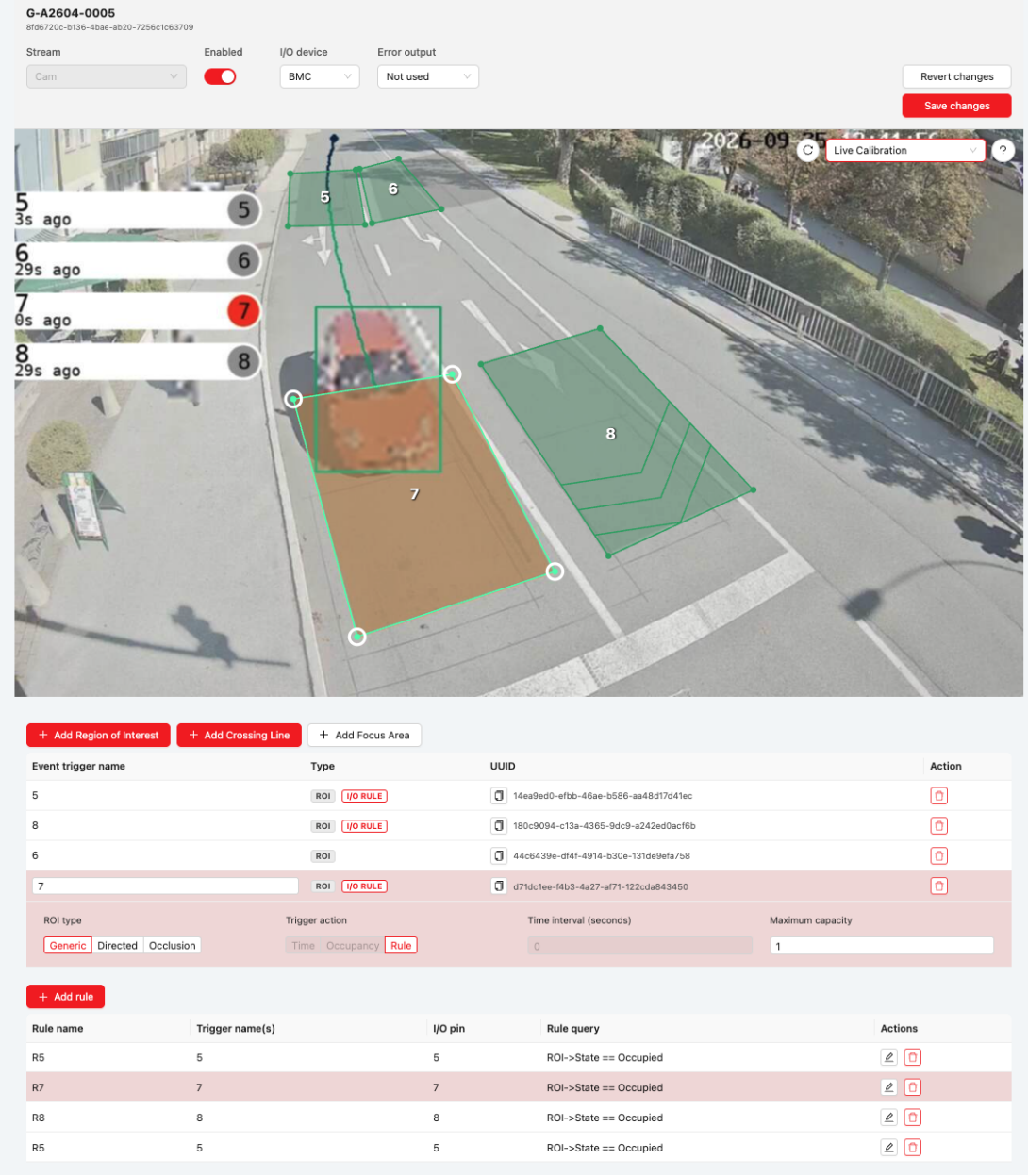

Local configuration of ROIs, Crossing Lines, rules, and the I/O device.

The Configuration page allows you to change the active configuration directly on the BMA. This enables configuration of a device without an internet connection, when configuration via the Control Center is unavailable.

Local configuration is designed for adaptive traffic control and supports regions of interest (ROIs), Crossing Lines (CLs), rules, and, depending on the device, BMC (BMA TLC v3 only) or Quido as the I/O device.

Settings such as the MQTT connection cannot be changed on this page. These settings are only relevant when the device is online and can be configured via the Control Center. An XKOPMV connection is also not supported locally and must be configured in the Control Center.

Mobile

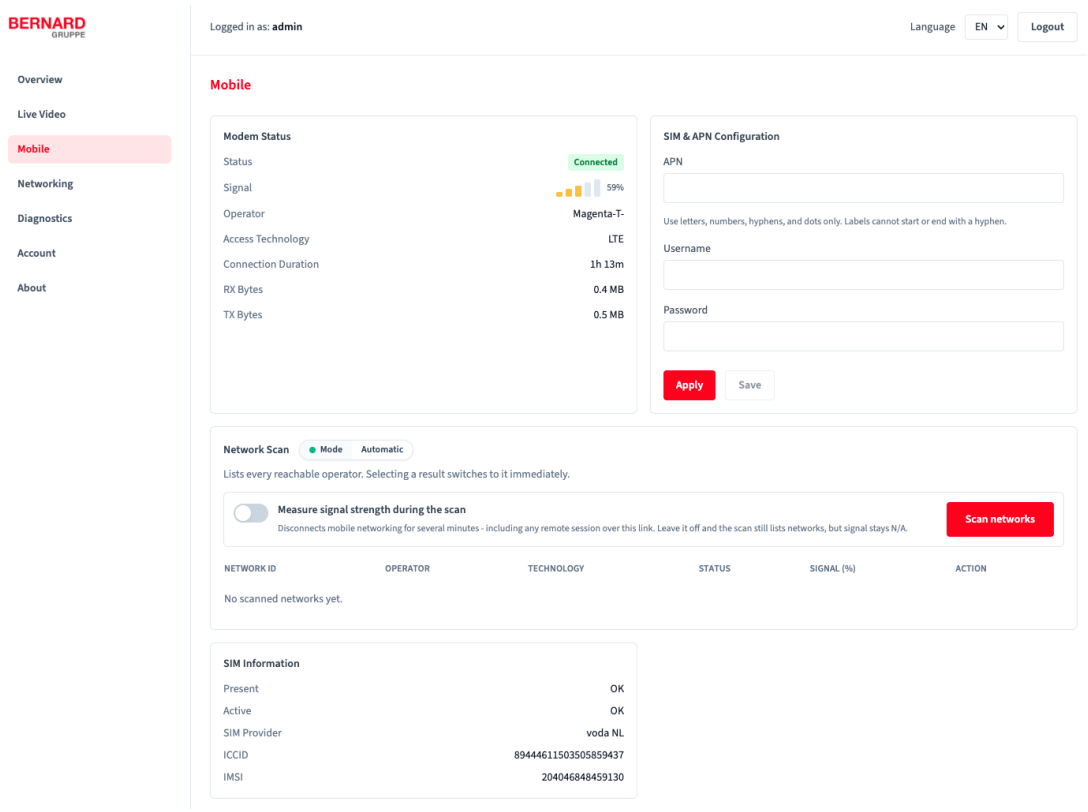

Mobile connection, SIM and APN configuration, network scan, and SIM information.

The Mobile page provides the current mobile connection status, SIM and APN configuration, available-network scanning, and SIM identification details.

- **Modem status:** Shows whether the modem is connected, the current signal strength, mobile operator, access technology, connection duration, and transferred data volume. The device uses LTE for mobile data connectivity.
- **SIM and APN configuration:** Configure the APN required by the SIM provider. The username and password are optional and can be left empty when the provider does not require credentials. For SIM cards supplied with the device, these fields should normally remain empty.
- **Network scan:** Scans for reachable LTE networks and displays their network ID, operator, availability, and, optionally, signal strength. By default, the device selects the mobile network automatically. After a scan, another available network can be selected manually. A network change is considered successful only after working mobile data connectivity has been verified. GSM networks are not considered during network selection.

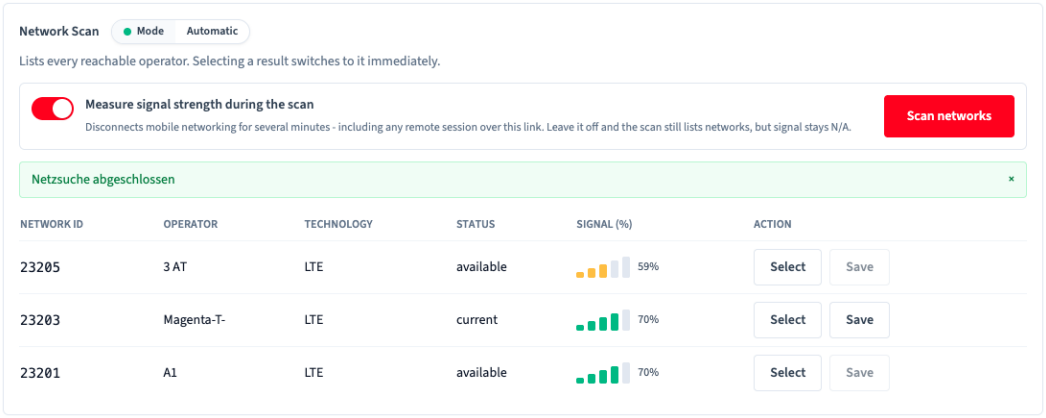

Available LTE networks after a network scan.

> **TEMPORARY CONNECTIVITY INTERRUPTION**
>
> Measuring signal strength interrupts mobile connectivity and remote sessions using it for several minutes. Without measurement, networks are listed without signal-strength values.

- **SIM information:** Shows whether a SIM card is present and active, together with the SIM provider, ICCID, and IMSI. Use these details to identify the SIM card when diagnosing connectivity issues or contacting support.

Network

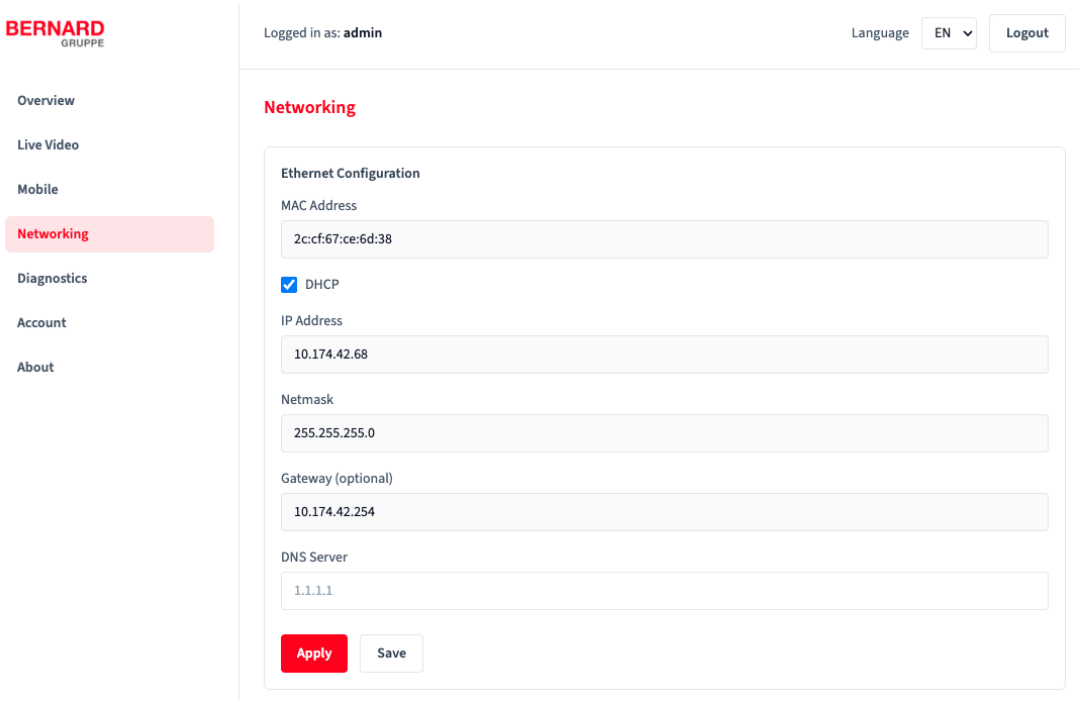

Ethernet configuration in the Service Interface.

The Network page contains the Ethernet configuration of the device. Depending on the network environment, use DHCP or configure the IP address, subnet mask, gateway, and DNS server manually.

NETWORK RESTRICTIONS

- IPv6 is not supported.
- DHCP addresses must not be within the range `172.17.0.0/16` (Docker default network).

OPTIONAL GATEWAY

The gateway field can be left empty when internet access is provided through the mobile connection and Ethernet is used only for Event Delivery or XKOPMV without internet access.

Firewall settings: To communicate with the Control Center, the following ports must be open for outgoing connections:

Port	Protocol	Direction
80	IPv4 - TCP/UDP	Outgoing
123	IPv4 - UDP	Outgoing
443	IPv4 - TCP/UDP	Outgoing
1194	IPv4 - UDP	Outgoing
8883	IPv4 - TCP	Outgoing
5671	IPv4 - TCP	Outgoing

Diagnostics

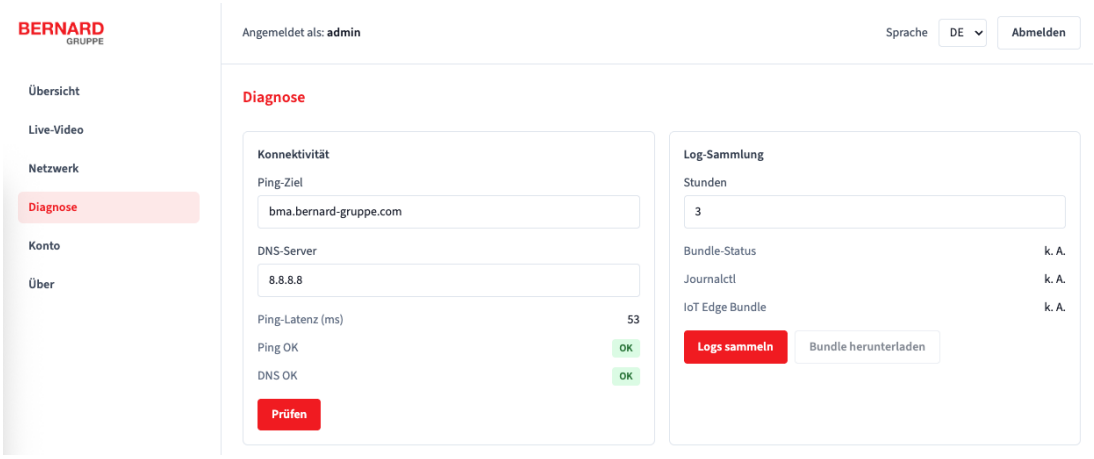

Diagnostics view with ping / DNS test and log collection.

- Perform connectivity tests via ping and DNS.
- Use latency as well as ping / DNS status for troubleshooting.
- Collect logs and provide them for support cases.

Account

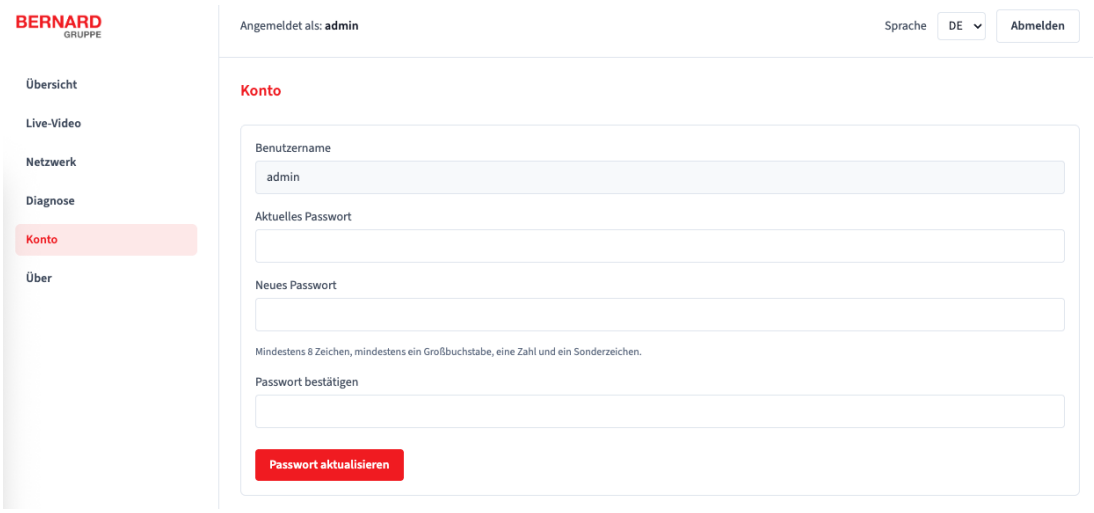

Account management for changing the local service password.

- Change the local service password.

PASSWORD POLICY

At least 8 characters, at least one uppercase letter, one number, and one special character.

8. Troubleshooting

Symptom	Probable cause	Action
Both LEDs remain dark (allow for normal flashing intervals)	No or insufficient power supply	- Use a multimeter to check that the supply voltage at the BMC input matches the selected 24 V or 30 V supply. - Check that the cable length and cross-section comply with the limits for the selected supply voltage. For longer cable runs, use the recommended 30 V supply. - Ensure that the power supply provides sufficient power.
Status / power LED remains red during intended operation	System not ready or shutting down	Contact support
- Status / power LED flashing red - Application status = Error	Application error / system application not running correctly	- Collect log files in the Service Interface and provide them when contacting support. - Verify that communication between BMA and BMC is working correctly. The corresponding sensor LED on the BMC lights white and flashes green periodically.
- Connectivity LED flashing blue - Service Interface connectivity status = None	No active data connection (SIM/APN/network)	- Check signal strength in the Service Interface. - Check the APN settings of the network operator in the Service Interface (leave empty for supplied SIM cards). - Check whether the SIM card is inserted correctly. - If necessary, test the SIM card in another device.
- Connectivity LED flashing blue - Service Interface shows internet access without a connection to the Control Center	Internet access available, but Control Center reachability not confirmed	Check the network/firewall configuration and connection to the Control Center in the Service Interface. If the problem persists, contact support.

9. Transport and storage

- If possible, transport the detector in its original packaging and protect it from shocks, vibrations, and moisture.
- Protect protective caps / connectors from contamination; avoid tensile load on cables / connectors.
- Store dry and low-dust, storage temperature: **-40 °C to +85 °C**.

10. Maintenance and service

The detector is maintenance-free. If necessary, clean the lens / rain hood and check the mounting (hose clamps / screws) regularly for tight fit.

Cleaning:

- Clean the lens / rain hood with a soft, lint-free cloth (slightly moistened if necessary).
- Do not use aggressive cleaning agents, solvents, or abrasive aids.
- Do not use a high-pressure cleaner / no direct water jet on plug connections.

11. Decommissioning and disassembly

DANGER

Switch off the power supply before disassembly and make sure the detector is de-energized.

CAUTION

The metal plate on the rear of the device may become hot during operation.

1. Switch off the power supply.
2. Disconnect the connector(s) and remove strain relief / cables.
3. Secure the detector against falling and loosen the hose clamps.
4. Remove the detector with bracket and pack it for transport / storage (see Transport and storage).

12. Conformity and disposal (EU)

Data protection

The detector is intended for the collection of anonymized traffic data. The operator is responsible for compliance with data protection requirements (e.g. GDPR) in the respective deployment context.

Conformity

The product is intended for use in the EU. The device contains a radio module (LTE); therefore requirements of the Radio Equipment Directive (RED, 2014/53/EU), among others, may apply. The EU Declaration of Conformity (DoC) and information on CE marking are available from support.

Disposal

- Collect packaging materials separately and dispose of them in accordance with local regulations.
- Do not dispose of waste electrical equipment in household waste; collect separately and send for environmentally sound recycling.

13. Contact

Manufacturer: Bernard Technologies GmbH, Auweg 20, 6112 Wattens, Austria

If you have questions or problems:

- Support Center: Support
- Email: service@bernard-gruppe.com
- Phone: +43 5223 5840 10160, +49 221 222825 60
- For quick processing, please provide: serial number, hardware revision, installation site, brief description of the fault